ADNS-6180-001

Laser Mouse Trim Lens

Data Sheet

Lead (Pb) Free
RoHS 6 fully
compliant

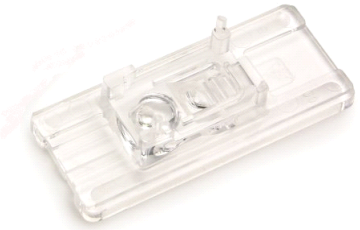

Description

The ADNS-6180-001 laser mouse trim lens is designed for use with Avago Technologies ADNS-7700 one chip LaserStream™ USB sensors. Together with the integrated VCSEL in the same package, the ADNS-6180-001trim lens provides the directed illumination and optical imaging necessary for proper operation of the sensor. ADNS-6180-001trim lens is a precision molded optical component and should be handled with care to avoid scratching and contamination of the optical surfaces.

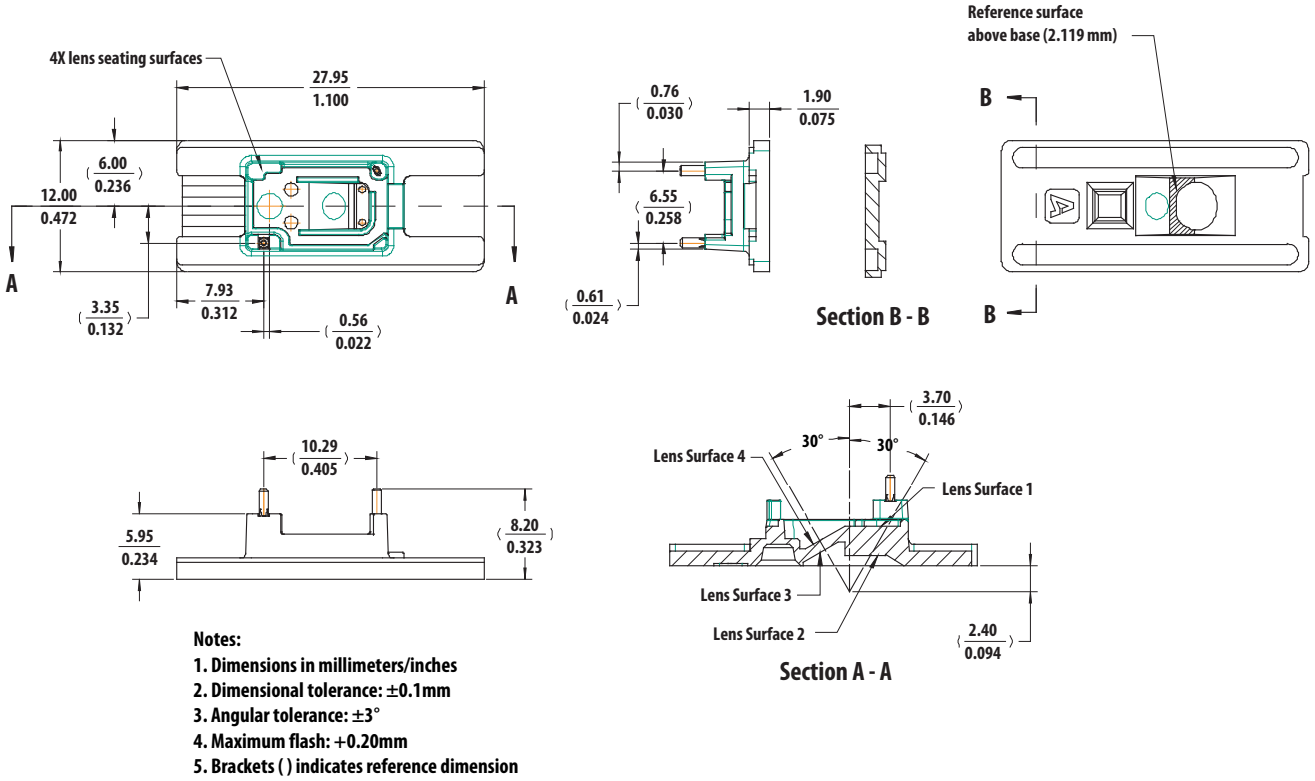

Notes:

1. Dimensions in millimeters/inches
2. Dimensional tolerance: ±0.1mm
3. Angular tolerance: ±3°
4. Maximum flash: +0.20mm
5. Brackets ( ) indicates reference dimension

Figure 1. ADNS-6180-001 trim lens outline drawings and details

Mechanical Assembly Requirements

All specifications reference Figure 2, Optical System Assembly Diagram

Parameters	Symbol	Min.	Typ.	Max.	Unit	Conditions
Distance from Object Surface to Lens Reference Plane	A	2.18	2.40	2.62	mm	When use with ADNS-7700
Distance from Object Surface to Sensor Reference Plane	B		7.40		mm	Sensor aperture must be in contact with lens housing surface

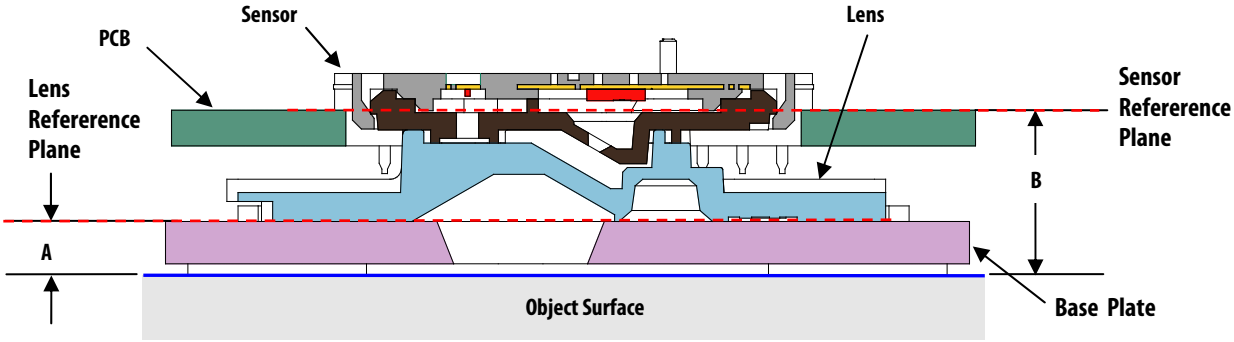

Figure 2. Optical system assembly cross-section diagram

Lens Design Optical Performance Specifications

All specifications are based on the Mechanical Assembly Requirements.

Parameters	Symbol	Minimum	Typical	Maximum	Unit	Conditions
Design Wavelength	λ		842		nm	
Lens Material* Index of Refraction	N	1.5693	1.5713	1.5735		λ = 842 nm

*Lens material is polycarbonate. Cyanoacrylate based adhesives should not be used as they will cause lens material deformation.

Mounting Instructions for the ADNS-6180-001 Laser Mouse Trim Lens to the Base Plate

The STEP or IGES format drawing file with design specifications for laser mouse base plate features and lens are available. These features are useful in maintaining proper positioning and alignment of the ADNS-6180-001 trim lens when used with the ADNS-7700 LaserStream USB sensors. These file can be obtained by downloading from Avago technologies website or by contacting your local Avago Technologies sales representative.

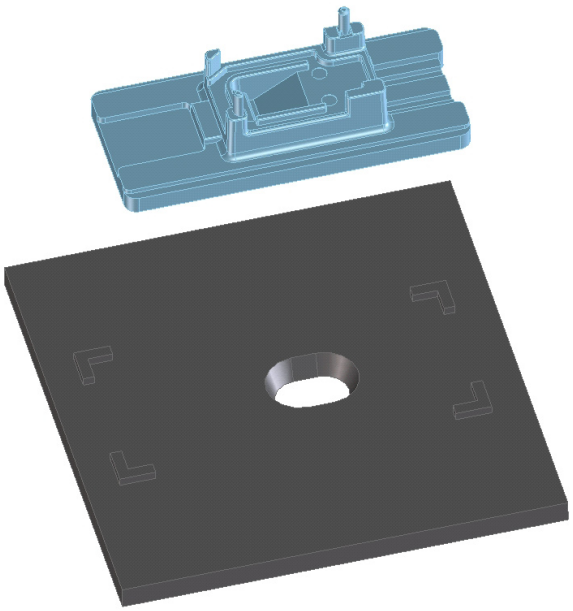

Figure 3. Illustration of base plate mounting features for ADNS-6180-001 laser mouse trim lens

For product information and a complete list of distributors, please go to our web site: **www.avagotech.com**

Avago, Avago Technologies, and the A logo are trademarks of Avago Technologies in the United States and other countries.
Data subject to change. Copyright © 2005-2009 Avago Technologies. All rights reserved.
AV02-1891EN - May 8, 2009